UNION SWITCH & SIGNAL

A member of the ANSALDO Group
5800 Corporate Drive Pittsburgh, PA 15237

SERVICE MANUAL 5415

Installation, Adjustment and Maintenance

PL-3

POSITION LIGHT SIGNAL

Part No. N438590

February, 1981 (Revised August, 1991)
ID0561A
D-8/91-2129-1

ANSALDO
Trasporti

COPYRIGHT 1991, UNION SWITCH & SIGNAL INC.
PRINTED IN USA

UNION SWITCH & SIGNAL

A member of the ANSALDO Group
5800 Corporate Drive Pittsburgh, PA 15237

SERVICE MANUAL 5415

Installation, Adjustment and Maintenance

PL-3

POSITION LIGHT SIGNAL

Part No. N438590

February, 1981 (Revised August, 1991)
ID0561A
D-8/91-2129-1

ANSALDO
Trasporti

COPYRIGHT 1991, UNION SWITCH & SIGNAL INC.
PRINTED IN USA

Revised and new pages of this manual are listed by page number and date:

Page No.	Date	Page No.	Date
3	8/91		
7	8/91		
8	8/91		
A-2	8/91		
A-3	8/91		
A-5	8/91		
A-6	8/91		
A-7	8/91		
A-8	8/91		

CONTENTS

Section		Page
I	INTRODUCTION	1
II	DESCRIPTION	1
III	INSTALLATION	2
3.1	MOUNTING	2
3.2	WIRING	2
IV	ADJUSTMENTS	3
4.1	ALIGNMENT PROCEDURE	3
4.1.1	Alignment on Curves	4
4.1.2	Close-Up Indication	4
V	MAINTENANCE	5
5.1	FIELD MAINTENANCE	5
5.1.1	Preventive Maintenance	5
5.1.2	Corrective Maintenance	5
5.2	SHOP MAINTENANCE	6
5.2.1	Inspection	6
5.2.2	Corrective Maintenance	7
APPENDIX A	PARTS LIST	
A.1	POSITION LIGHT SIGNAL ASSEMBLY N438590	A-1
A.1.1	Lamp Units	A-3
A.1.1.1	Reflector Unit N187898	A-4
A.1.1.2	Lamp Unit Case N107386	A-5
A.1.2	Terminal Box N187832-001	A-7
A.1.3	Lamp Support N177969	A-7
A.2	POSITION LIGHT INSTALLATION ASSEMBLY X438590-001	A-9
A.3	MARKER LIGHT SIGNAL ASSEMBLY N438591	A-9
A.4	MARKER LIGHT INSTALLATION ASSEMBLY X438591-001	A-9

ILLUSTRATIONS

Figure		Page
1	Typical Wiring Label	2
2	PL-3 Position Light Signal Adjustments	3
A-1	PL-3 Position Light Signal Top Assembly	A-2
A-2	Lamp Unit	A-6
A-3	Terminal Box	A-8

SECTION I
INTRODUCTION

The PL-3 Position Light Signal displays aspects and gives indications by means of rows of lights, being visible during both day and night. The unit may be mounted on a ground mast, a signal bridge or a bracket post.

SECTION II
DESCRIPTION

The PL-3 Position Light Signal is comprised of rows of light units, each consisting of three units mounted on pipe supports extending radially from a center hub. A background of maximum effectiveness for minimum size and weight is also provided. It is made of 18 gage steel and is held in fixed relation to its pipe supports by means of substantial brackets. The supports are of 1-1/4 inch pipe, threaded and fitted into a hub casting. The cast iron light units are mounted on the pipe supports in such a manner that the hoods project through the circular holes in the background and are mounted on 18-inch center lines (radially). Cover plates are used for blanking out openings in the background for indications not required.

All wires are brought to terminals in a centrally located terminal box that is provided with an easily opened door. A flexible conduit connector provides for changes in signal alignment without interference with wiring.

The light units consist of a cast iron case with a door on each side. The doors are secured by thumb screws and provide access to all parts. Each unit has a separate supporting bracket attached by four bolts. These bolts provide for universal adjustment in aligning the unit through the use of a ball and socket. The lens provides a horizontal spread of 18 degrees, a 10 degree deflection to the left and a close-up indication is obtained by a 20 degree downward deflection. One lamp is required for each lens. The lamp receptacle is accurately located and secured so that lamps which have their filaments properly located with respect to the lamp bases can be used interchangeably. The lamps are specially based to allow replacement without unit adjustment. The inclined roundel and a phankill unit are incorporated to reduce phantom effects.

A single light unit, with appropriate color roundel and mounting hardware, is used for marker light applications. Otherwise the light unit is the same as a single unit of the PL-3 position light assembly.

SECTION III
INSTALLATION

3.1 MOUNTING

The position light assembly is completely assembled prior to shipping and is ready for clamping to the ground mast or signal bridge. Mounting is accomplished by the use of two 3/4-inch "U" bolts, suitable for five-inch masts, lock washers and nuts. The initial mounting of the assembly should be aligned approximately with the track during installation. Final alignment is done on the individual light units by performing the adjustment procedures detailed in Section IV "Adjustments".

3.2 WIRING

All wiring from individual light units is brought into the terminal box. A label on the inside of the cover shows the wiring and terminal arrangement. A typical wiring label is shown in Figure 1. Wiring to the terminal board should be in accordance with installation specifications.

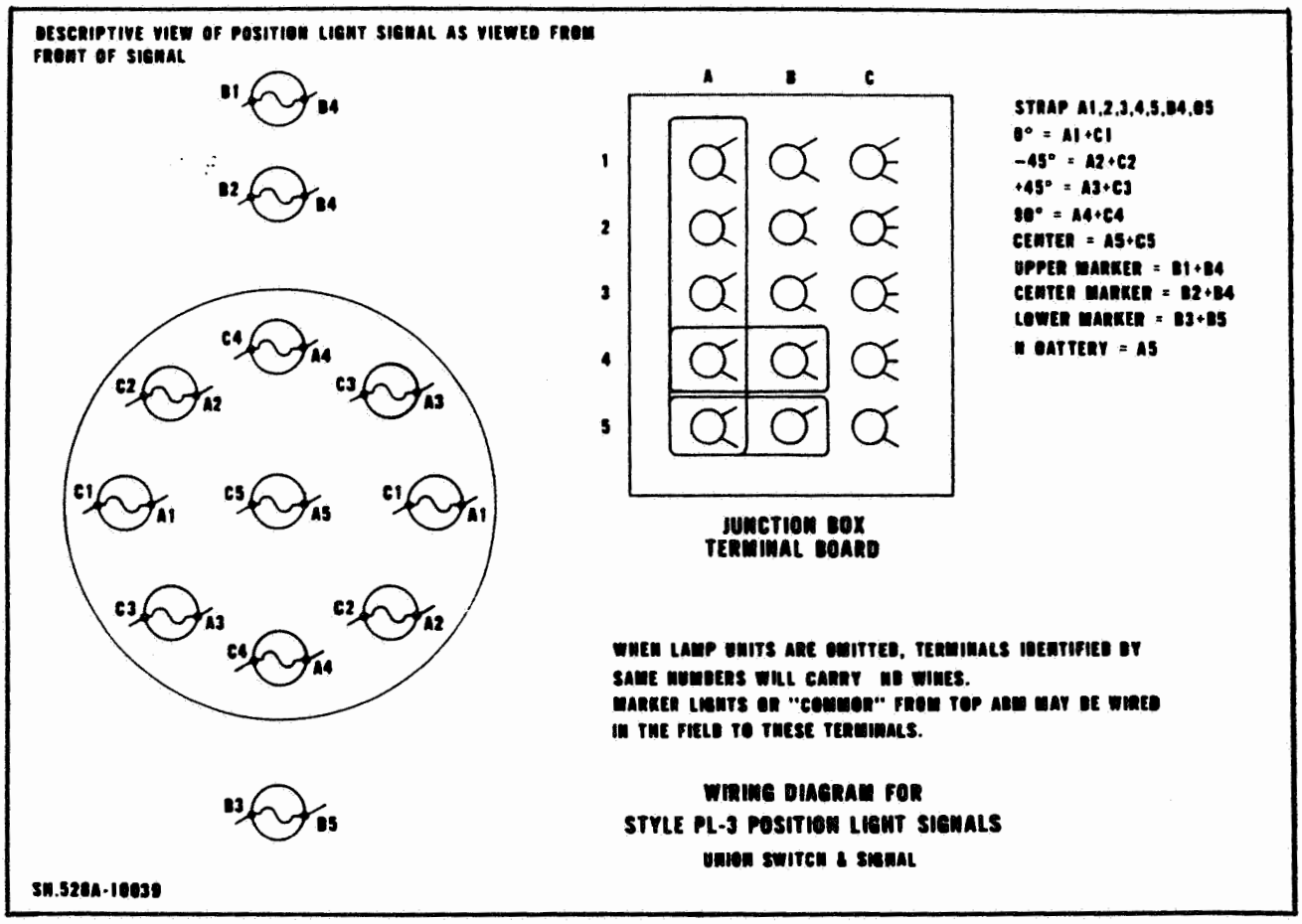

Figure 1. Typical Wiring Label

SECTION IV
ADJUSTMENTS

NOTE

PRIOR TO MAKING ADJUSTMENTS, THE MAIN SIGNAL HEAD WITH ALL UNITS ATTACHED SHOULD BE APPROXIMATELY ALIGNED WITH THE TRACK DURING INSTALLATION.

4.1 ALIGNMENT PROCEDURE

Before making any adjustment of the individual light units "A" (see Figure 2), case iron arm "D" must be checked to assure that it is securely fastened to its pipe support. Exact Alignment of the main light beam is obtained by adjustment of the individual light units "A" by means of the ball and socket joint "B", and with the use of a special sighting device "J", applied to socket "E". The entire adjustment can be accomplished by only one person located at the signal.

In sighting device "J", used for this adjustment, the line of sight through sighter tube "L" is parallel to the axis of pin "K". All lamp units are set at the factory so that the light beam is parallel to the axis of sighter socket "E". Consequently, by field adjustment with sighter "J" of all lamp units of a signal, all light beams will be properly aligned for best service and uniformity of indication.

The arm of sighter "J" is long enough to extend beyond the background for all units except the hub light. A hole is provided in the background through which the tube may be sighted when aligning the hub light.

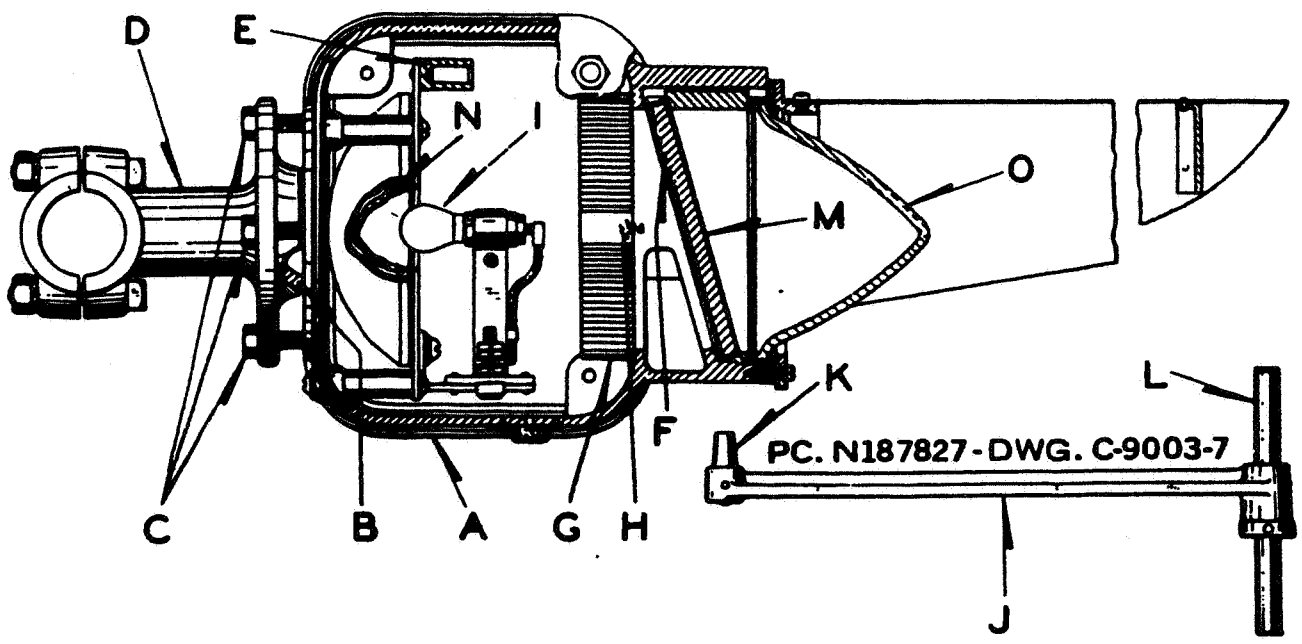

Figure 2. PL-3 Position Light Signal Adjustments

The alignment is obtained with the side covers of the lamp units removed and the tapered pin "K" on sighting device "J" inserted in sighter socket "E" inside the unit. Pin "K" must be held firmly so that it is tight in socket "E" at all times during the alignment. The unit is adjusted horizontally and vertically until the center of the cross hair in the sighter tube "L", when viewed through the peep hole, is aligned on the point where it is desired that the engineman first observe the main indication.

For vertical adjustment of the beam, slightly loosen the bolts "C" on the horizontal center line of the unit, and raise or lower the beam, as required, by means of the bolts "C" on the vertical center line. To raise the beam, loosen the lower bolt "C" and tighten the upper one the amount the lower one was loosened. To lower the beam, loosen the upper bolt "C" and tighten the lower one the amount the upper one was loosened.

For horizontal adjustment of the beam, slightly loosen the bolts "C" on the vertical center line of the unit and move the beam to the right or left, as required, by means of the bolts "C" on the horizontal center line. To move the beam to the right, loosen left-hand bolt "C" and tighten the right-hand one the amount the left one was loosened. To move the beam to the left, loosen the right-hand bolt "C" and tighten the left-hand one the amount the right one was loosened.

When loosening bolts on one axis for adjustment along the other axis, care must be taken to assure that any previous adjustment will not be disturbed. This loosening should be just enough to permit the adjustment desired.

After the adjustment is completed, all bolts "C" must be securely tightened to maintain the proper indication and the alignment rechecked with the sighter.

4.1.1. Alignment on Curves

The clear flat spreader "M" which is located behind the conical cover "O", provides a maximum of 18 deg. spread on the horizontal axis which is divided 9 deg. on either side of the vertical axis. Therefore, the center of the beam should be aligned approximately half-way (not to exceed 9 deg.) around the curve and the indication checked (from a locomotive cab is possible) to see that it fills in properly up to the signal. It may be necessary on sharp curves to readjust the main beam after this check.

4.1.2 Close-Up Indication

The close-up indication is obtained from prisms "P" which are part of spreader "M", and in addition to being deflected downward is deflected horizontally 10° to the left. This provides a good indication which is easily observed up to as near the signal as an engineman in the cab of a locomotive will ever approach. The alignment of the close-up is fixed by the assembly of the glasses and should not be disturbed.

SECTION V
MAINTENANCE

5.1 FIELD MAINTENANCE

5.1.1 Preventive Maintenance

A. Twice Per Year

1. The cover glass "O" (Figure 2) and the reflector "N" should be kept as clean as possible at all times. These should be wiped off regularly with a lintless cloth. The cover glass "O" and spreader "M" are sealed into the unit and their inside surfaces need no cleaning. The back of spreader "M" can be cleaned by loosening screws "H" (at right and left of "G") and removing "Phankill" unit G.

2. Check for cracked lens and reflector, and replace as necessary.

3. Check for loose or missing hardware, and tighten or install new hardware as necessary.

B. Once Per Year

1. Check alignment (refer to Section IV, "Adjustments")

2. Check lamp voltage, and adjust as necessary. Since there are no means to vary the lamp voltage internally, the lamp voltage must be adjusted at the power source. The voltage should be as required by the installation specification.

5.1.2 Corrective Maintenance

A. Alignment

If a check of the main light beam shows an individual light unit requires an adjustment, perform the adjustments described in Section IV.

NOTE

THE REFLECTOR AND LAMP RECEPTACLE ARE FIXED IN THEIR PROPER OPTICAL ADJUSTMENT AT THE FACTORY AND SHOULD NEVER BE DISTURBED.

B. Lamp Replacement

1. REMOVE--To remove a lamp "I", depress the lamp into the socket as far as it will go to disengage the pins in the lamp base from the pin seats in the socket. Turn the lamp counter-clockwise and pull the lamp from the socket, taking care not to disturb the position of the lamp receptacle or reflector.

2. INSTALL--To install a lamp, insert the lamp base into the socket as far as it will go, then turn the lamp clockwise as far as it will go and then pull out until the pins in the lamp base are properly seated in the pin seats of the socket. This is necessary in order to have the filament in its correct location.

C. Light Unit Replacement

CAUTION

BE SURE TO DEENERGIZE POWER TO THE LIGHT UNIT TO BE REPLACED, OTHERWISE EQUIPMENT DAMAGE MAY RESULT.

1. Open the side doors of the light unit and remove the wiring from the terminals on the lamp receptacle board.

2. Remove the three screws that hold the hood to the cover glass ring and remove the hood.

CAUTION

BE SURE TO SUPPORT THE LIGHT UNIT WHEN REMOVING THE FOUR MOUNTING BOLTS, OTHERWISE EQUIPMENT DAMAGE MAY RESULT.

3. REMOVE--To remove a position light unit, remove the four mounting/alignment bolts "C" (Figure 2) while supporting the light unit. When the bolts are removed, the light unit is then free to be lowered clear of the support and withdrawn from the background.

4. INSTALL--Position the light unit into the background and close enough to the support to re-route the wiring back into the case. Install the four bolts "C" through the support flange and into the light unit case approximately an equal distance.

5. Reinstall the hood and secure with the three screws.

6. Connect the wiring to the terminals on the lamp receptacle board.

7. Re-apply power to the light unit.

8. Perform the alignment procedure described in Section IV, Adjustments.

9. Secure both doors with the two thumb screws.

5.2 SHOP MAINTENANCE

5.2.1 Inspection

A. Visually inspect the light unit for a cracked or broken conical cover "O" (Figure 2), flat glass spreader (roundel) "M", or reflector "N". Replace as necessary (refer to Appendix A for item part number).

B. Inspect and be sure that all hardware is in place and securely tightened. Tighten or replace as necessary.

5.2.2 Corrective Maintenance

A. Replace Clear Conical Cover (Figure A-2, Item 38)

1. Remove the three screws (46) that hold the hood (35) to the cover glass ring (39) and remove the hood.

2. Remove the three screws (45) that hold the cover glass ring to the case and remove the ring.

3. Remove as much of the sealing compound as possible from around the outer edge of the conical cover.

4. Remove the conical cover and remove the remaining sealing compound, taking care not to damage the gasket (43) behind the conical cover. Inspect the gasket and replace it if it is cracked or damaged.

5. Install the new conical cover and fill the opening around the outer edge of the conical cover with sealing compound, A041498 (Duxseal), so that an excess will squeeze out between the case and cover glass ring.

6. Install the cover glass ring and secure with the three screws. Clean off excess sealing compound.

7. Install the hood and secure with the three screws.

8. After assembly, seal over and around the cover glass ring and case with adhesive, A41490 (3M #EC847), making sure that all cracks and depressions between the ring and case are filled with adhesive.

B. Replace Roundel (Figure A-2, Item 36)

1. Perform the steps 1-3 inclusive of the preceding task A (Replace Clear Conical Cover).

2. Remove the conical cover and inspect for damage. Remove the remaining sealing compound, taking care not to damage the gasket (43) behind the conical cover.

3. Remove the gasket (43), spacer ring (37) and then the roundel (36). Inspect the gasket (43) and phankill unit (40), behind the roundel, for damage and replace if necessary.

4. Apply gasket J470080 (47) to the outer edge of the new roundel, and install the roundel with the words "BACK BOTTOM" positioned toward the Phankill Unit and at the bottom.

5. Install the spacer ring (37) and gasket (43).

6. Perform the steps 5-8 inc. of the preceding task A (Replace Clear Conical Cover).

C. Replace Phankill Unit (Figure A-2, Item 40)

1. Remove the two screws (31) securing both side doors (29) and remove the doors.

2. Loosen the two screws (42), on each side of the Phankill Unit (40).

3. Lift the one end of the Phankill Unit to disengage the mounting screw and then slip the unit out of the case.

4. To install the new unit, slide the unit into the case so that the bracket is positioned behind the mounting screw. Lift the unit and position the other bracket behind the remaining screw. Tighten both screws (42) on each side of the Phankill Unit.

5. Install both side doors and secure with the two screws.

D. Replace Reflector/Lamp Assembly (Figure A-2, Item 2)

1. Remove the two screws (31) securing both side doors (29) and remove the doors.

2. From the rear of the case, remove the three screws (41) and lock washers that secure the reflector/lamp assembly to the case.

3. Lift the assembly and slide the assembly out either side of the case.

CAUTION

HANDLE THE REPLACEMENT ASSEMBLY CAREFULLY WHEN INSTALLING IT IN THE CASE. THE REFLECTOR AND LAMP RECEPTACLE HAVE BEEN FIXED IN THEIR PROPER OPTICAL ALIGNMENT AT THE FACTORY AND SHOULD NEVER BE DISTURBED.

4. Carefully position the assembly into the case so that the three mounting bushings line-up with the mounting holes in the case. Install the three screws and lock washers (41) and then tighten.

5. Install both side doors and secure with the two screws.

A.2 POSITION LIGHT INSTALLATION ASSEMBLY X438590-001
(see Figure A-1 for parts location)

Item	Description	US&S Part No.
A	Signal Assembly	N438590
1-18	(Items referenced in section A.1)	--
19	U-Bolt, 3/4" (5" Pipe)	M095838
19a	Nut, 3/4"-10 UNC	J048026
19b	Washer, 3/4" Stl. Lk. Ex.	J047772
	Cable Outlet, Complete	N280571
	Conduit, 2-1/2" Flex.	M328828
	U-Bolt, 1/2" (5" Pipe)	M046567-001
	Nut, 1/2"-13 UNC	J048013
	Washer, 1/2" Stl.	J047769

A.3 MARKER LIGHT SIGNAL ASSEMBLY N438591

Item	Description	US&S Part No.
A	Light Unit*	N346802
	Support, Lamp	N095812
	Bolt, 3/8"-16 x 1-1/2"	M153684

* See section A.1.1 for parts list.

A.4 MARKER LIGHT INSTALLATION ASSEMBLY X438591-001

Item	Description	US&S Part No.
A	Marker Light*	N438591
	U-Bolt, 1/2" (5" Pipe)	M046567-001
	Nut, 1/2"-13 UNC	J048013
	Washer, 1/2" Stl.	J047769

* See section A.3 for parts list.

UNION SWITCH & SIGNAL
A member of the ANSALDO Group
5800 Corporate Drive Pittsburgh, PA 15237

SERVICE MANUAL 5415

APPENDIX A

PARTS LIST

PL-3

POSITION LIGHT SIGNAL

Part No. N438590

February, 1981 (Revised August, 1991)
ID0561A
D-8/91-2129-1

ANSALDO
Trasporti

COPYRIGHT 1991, UNION SWITCH & SIGNAL INC.
PRINTED IN USA

A.1 POSITION LIGHT SIGNAL ASSEMBLY N438590 (see Figure A-1 for parts location)

Item	Description	US&S Part No.
1	(Item no. not used)	--
2	Lamp Unit, Complete (Yellow)*	N223641
	Lamp Unit, Complete (Green)*	N268681
	Lamp Unit, Complete (Red)*	N438133
3	Terminal Box**	N187832-001
4	Background	N187793
5	Spider Arm	M187808
6	Bracket, Complete	N214339
7	Bracket, Complete	N214340
8	Brace	M214338
9	Lamp Support***	N177969
10	Cap, Lamp Support	M094336
11	Cap, Pipe (with 1/4" hole)	M187807
12	Cap, Pipe	M215395
13	Cover Plate (if applicable)	M095828
14	U-Bolt, 3/8"-16	J460112
14a	Nut, 3/8" Hex.	M335610
15	Pipe Plug, 1-1/4" (if applicable)	Std.
16	Bolt, 3/8"-16 x 1-1/2"	M153684
17	Bolt, 3/8" x 2-1/4" Sq. Hd.	J046636
17a	Nut, 3/8"-16 UNC	J048009
17b	Washer, 3/8", Stl. Lock Ex.	J047768
18	Screw, 5/16" x 3/4" Hex. Hd.	J050036
18a	Nut, 5/16"-18 UNC	J048006
18b	Washer 5/16", Pl. Stl.	J047642
19-23	(Item nos. referenced in section A.2)	--
24	Cover, Sight	M167497
25	Rivet, 9/64" x 7/32", Brass	J049050
26	Washer	M020686
27, 28	(Item nos. not used)	--
29	Cap Hub (if applicable)	M127175
30	Bolt, 3/8" x 1-1/4", Sq. Hd. (if applicable)	

* Refer to section A.2 for parts list.
** Refer to section A.1.1 for parts list.
***Refer to section A.1.3 for parts list.

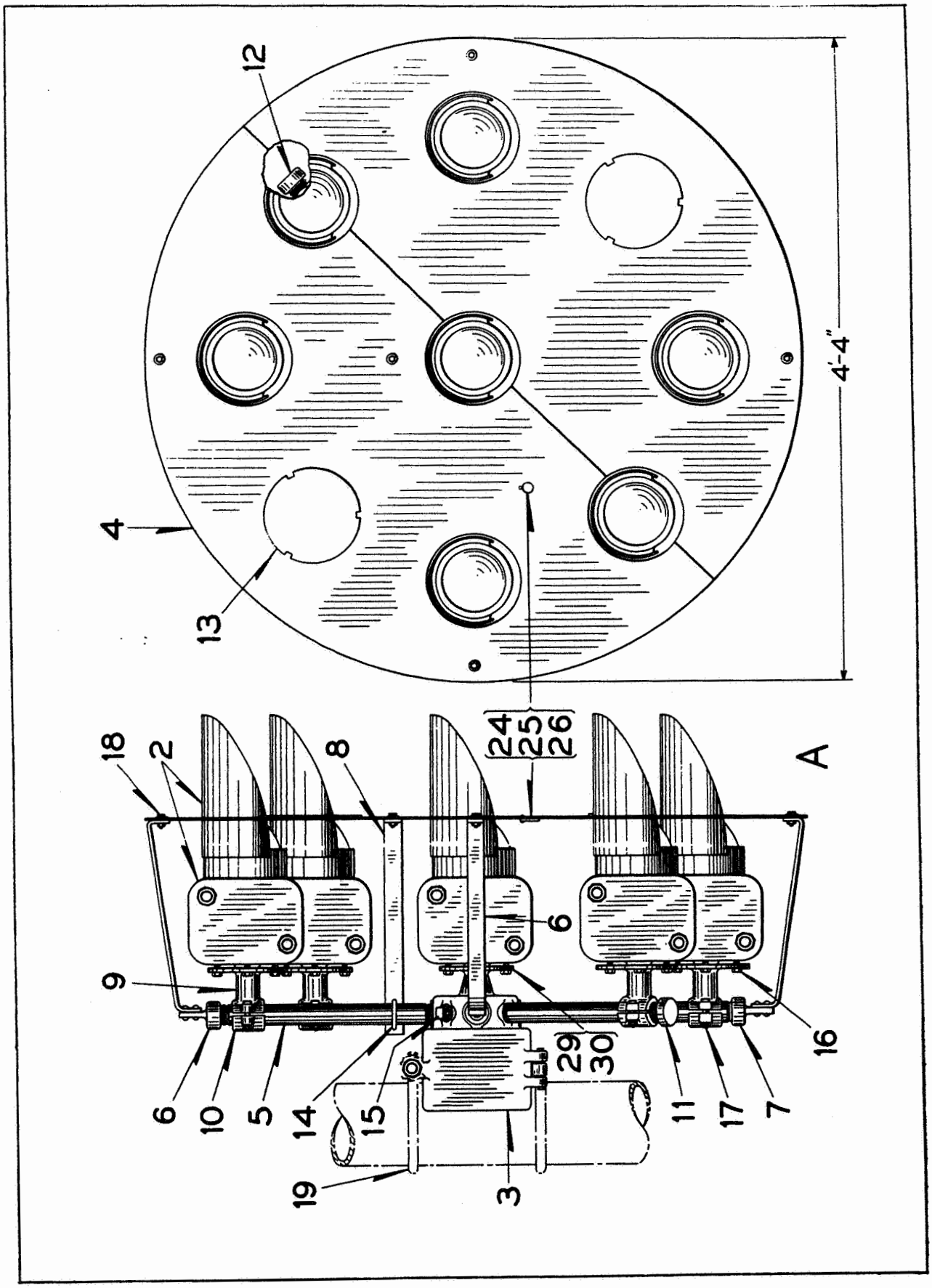

Figure A-1. PL-3 Position Light Signal

A.1.1 Lamp Units N223641 (Yellow) (see Figure A-2 for parts location)
N268681 (Green)
N438133 (Red)
N346802 (Lunar White Roundel - Clear Conical Cover)
N107387 (Clear Roundel - Novial Conical Cover)

Item	Description	US&S Part No.
1	(Item no. not used)	--
2	Reflector Unit, Complete*	N187898
3-27	(Item nos. referenced in section A.1.1.1)	--
28	Light Unit Case, Complete**	N107386
29-34	(Item nos. referenced in section A.1.1.2)	--
35	Hood	N250589
36	Roundel, 5-3/8" (Yellow)	J532005
36a	Roundel, 5-3/8" (Green)	J532010
36b	Roundel, 5-3/8" (Red)	J532074
36c	Roundel, 5-3/8" (Lunar White)	J532115
36d	Roundel, 5-3/8" (Clear)	J532004
37	Spacer Ring	M214291
38	Conical Cover, Clear	J532143
38a	Conical Cover, Noviol	J532142
39	Coverglass Ring	M250586
40	Phankill Unit	N187814
41	Screw, 14-24 x 1"	J051688
41a	Washer, Lock, 1/4" Pl. Stl.	J047766
42	Screw, 10-32 x 3/8"	J051666
43	Gasket, Acco Cork	J047224
44	Lamp (As per installation specifications)	
45	Screw, 10-32 x 1/2" Fil.	J051298
45a	Washer, #10, Stl. Lk.	J047733
46	Screw, 14-24 x 5/16"	J051337
47	Gasket	J470080

* Refer to section A.1.1.1 for parts list.
** Refer to section A.1.1.2 for parts list.

A.1.1.1 Reflector Unit N187898 (see Figure A-2 for parts location)

Item	Description	US&S Part No.
1	(Item no. not used)	--
2	(Item no. referenced in section A.1.1)	--
3	Reflector, Lamp	N187856
4	Socket, Lamp	J072466
5	Socket Holder	M187858
6	Base	M187857
7	Bracket	M187869
8	Terminal Post	M122489
9	(Item no. not used)	--
10	Nut	M029103
11	Washer	J047818
12	Nut, Lock	M186420
13	Washer	M029104
14	U-Clip	J703048
15, 16, 17	Rivet, Tubular, Ph. Brz.	J049969
16a	Washer	M249332
18	Screw, 8-32 x 1/2"	J052256
18a	Nut, 8-32	J048166
18b	Lock Washer, #8	J047681
19	Lead, Complete	N031094
20	Reflector	J532107
21	Holder, Reflector	M187850
22	Gasket, Rubber	J047148
23	Separator	M187870
24	Screw, 10-32 x 1/2"	J052355
24a	Nut, 10-32, Elas. Stp.	J048143
25	Screw, 10-32 x 3/4"	J052298
25a	Nut, 10-32	M263837
25b	Washer	M184911
26	Plate, Lamp Receptacle	N187852
27	Screw, 14-24 x 1/2"	J052582
27a	Washer, Lock, 1/4" Stl.	J047775

A.1.1.2 Lamp Unit Case N107386 (See Figure A-2 for parts location)

Item	Description	US&S Part No.
1	(Item no. not used)	--
2	(Item no. referenced in section A.1.1)	--
3-27	(Item nos. referenced in section A.1.1.1)	--
28	Case	M107354
29	Door	M187773
30	Gasket	M187849
31	Hex Screw	J460117
32	Gasket, Leather	J047160
33	Ventilator	M170243
33a	Wool	A065082
34	Drive Screw, #4 x 1/4"	J052501

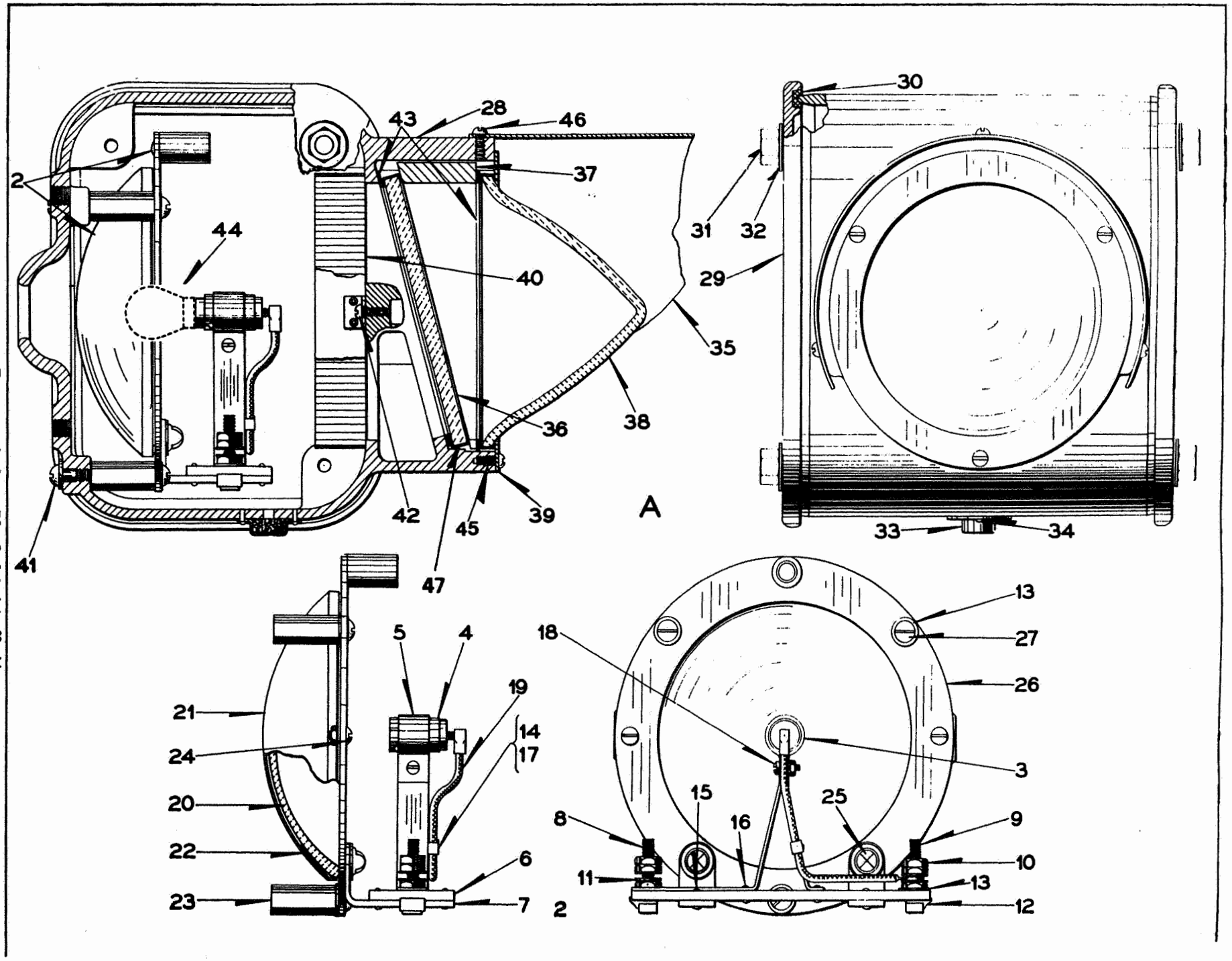

Figure A-2. PL-3 Light Unit

A.1.2 Terminal Box N187832-001 (see Figure A-3 for parts location)

Item	Description	US&S Part No.
1	(Item no. not used)	--
2	Terminal Box	M187806
3	Cover	M187772
4	Gasket	M187845
5	Terminal Board, Complete	N438660
6	Nut	M029103
7	Connector	M258059
7a	Connector	M175795
8	Washer	J047818
9	Nut	M029101
10	Screw, 14-24 x 3/4"	J052325
11	Plug, Pipe, 2" C.I.	J032915
	Street Ell, 2" x 45°	J032603
	Sleeve	M256314
12	Hex Nut	J048009
13	Eye Bolt	M133938
14	Gasket, Felt	J047131
15	Pin	M026105
16	Pin	M188042
17	Cable Outlet (For 2-1/2" S.S. Flex S. Conduit)	M280585
	Cable Outlet (For 2" S.S. Flex S. Conduit)	N074551
	Cable Outlet (For 1.375 Dia. Cable)	J712096
	Connector (W/Tapered Split Lead Sleeve, for Parkway Cable)	J070594
17a	Protector, Caplug, 2-1/2"	J703331

A.1.3 Lamp Support N177969 (see Figure A-1 for parts location)

Item	Description	US&S Part No.
1-8	(Item nos. referenced in section A.1)	--
9a	Support	M094334
9b	Gasket	J047131

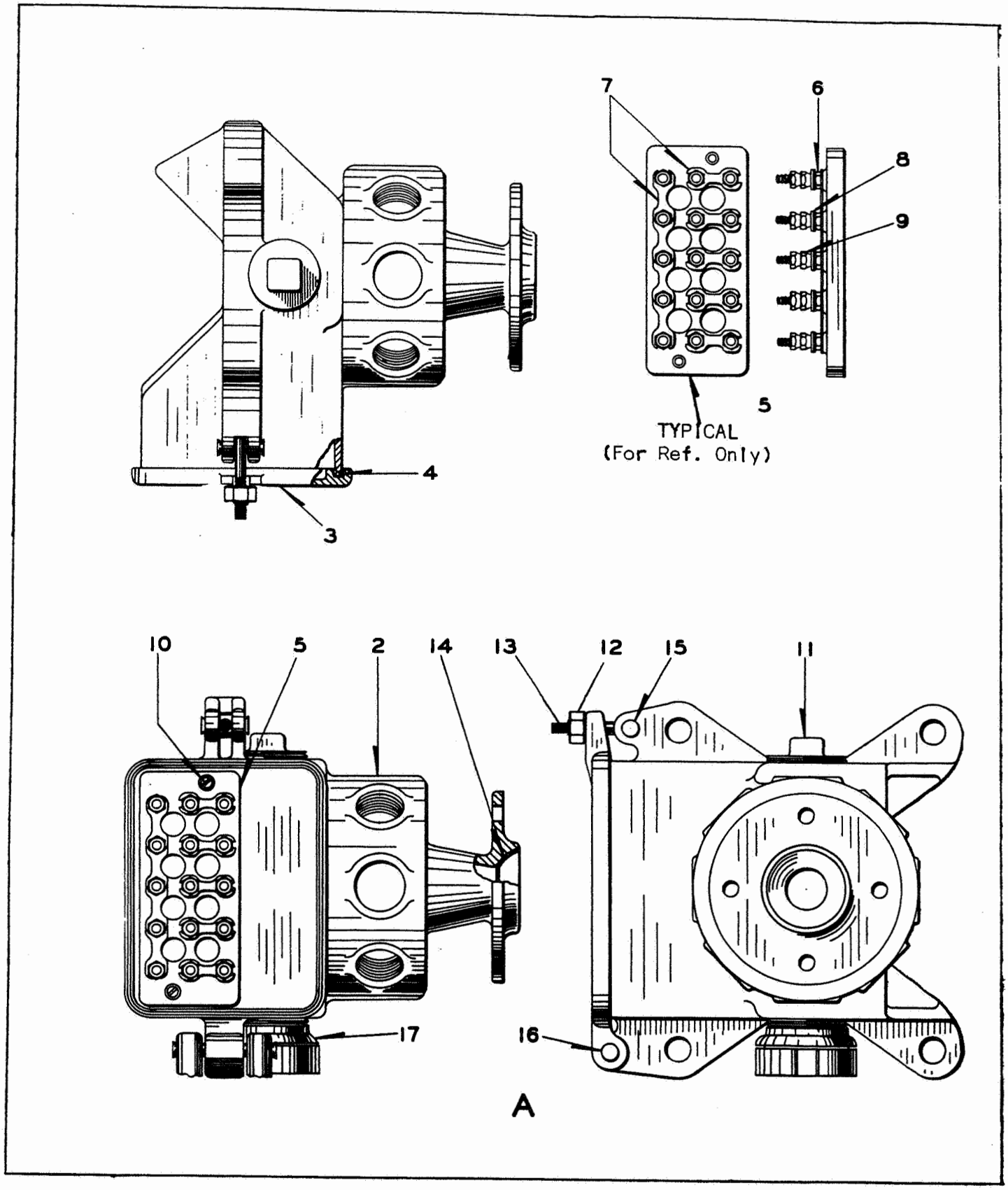

Figure A-3. Terminal Box

A.2 POSITION LIGHT INSTALLATION ASSEMBLY X438590-001
(see Figure A-1 for parts location)

Item	Description	US&S Part No.
A	Signal Assembly	N438590
1-18	(Items referenced in section A.1)	--
19	U-Bolt, 3/4" (5" Pipe)	M095838
19a	Nut, 3/4"-10 UNC	J048026
19b	Washer, 3/4" Stl. Lk. Ex.	J047772
	Cable Outlet, Complete	N280571
	Conduit, 2-1/2" Flex.	M328828
	U-Bolt, 1/2" (5" Pipe)	M046567-001
	Nut, 1/2"-13 UNC	J048013
	Washer, 1/2" Stl.	J047769

A.3 MARKER LIGHT SIGNAL ASSEMBLY N438591

Item	Description	US&S Part No.
A	Light Unit*	N346802
	Support, Lamp	N095812
	Bolt, 3/8"-16 x 1-1/2"	M153684

* See section A.1.1 for parts list.

A.4 MARKER LIGHT INSTALLATION ASSEMBLY X438591-001

Item	Description	US&S Part No.
A	Marker Light*	N438591
	U-Bolt, 1/2" (5" Pipe)	M046567-001
	Nut, 1/2"-13 UNC	J048013
	Washer, 1/2" Stl.	J047769

* See section A.3 for parts list.